Cruise Control (1ZZ–FE, 3ZZ–FE)

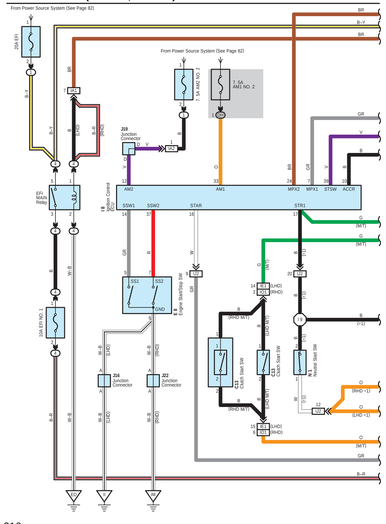

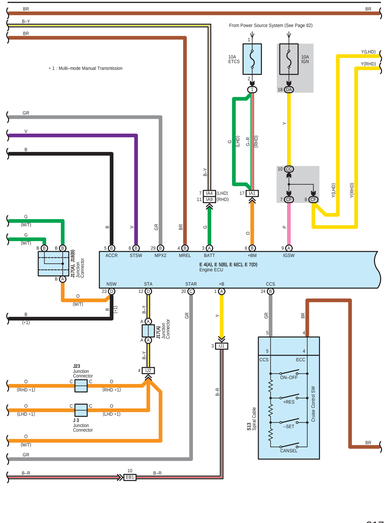

Cruise Control (1ZZ–FE, 3ZZ–FE)

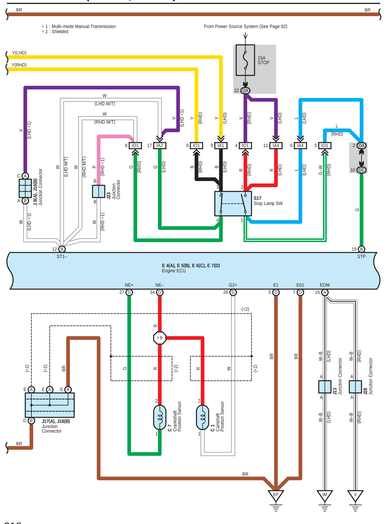

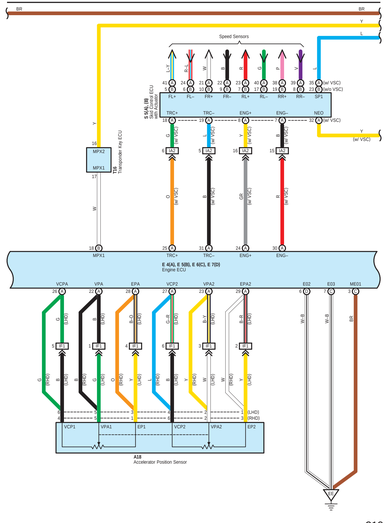
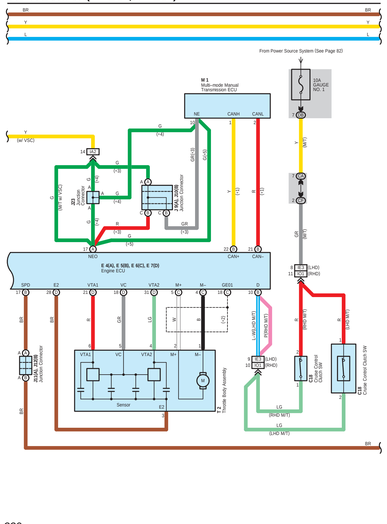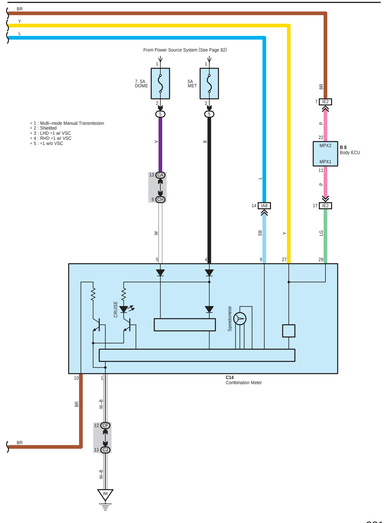
Cruise Control (1ZZ–FE, 3ZZ–FE)